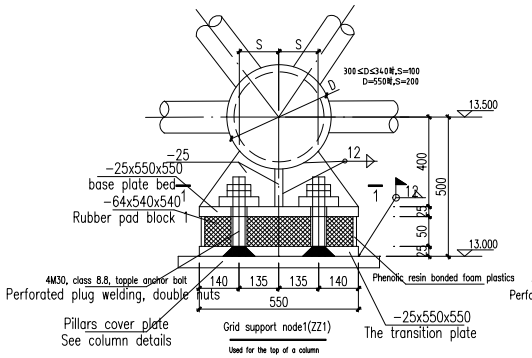

Note: The physical and mechanical properties of the bearing rubber pad should conform to the requirements of Appendix K in the technical specification for spatial grid structure JGJ7-2010.

Bearing rubber pad can be made of neoprene pad, coated with phenolic resin to prevent aging around, and bonded foam plastic.

In the process of installation and use, rubber pad should avoid contact with grease and other oil substances and other substances harmful to rubber.

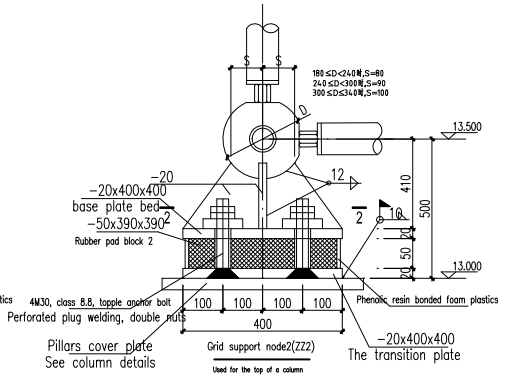

Note: The physical and mechanical properties of the bearing rubber pad should conform to the requirements of Appendix K in the technical specification for spatial grid structure JGJ7-2010.

Bearing rubber pad can be made of neoprene pad, coated with phenolic resin to prevent aging around, and bonded foam plastic.

In the process of installation and use, rubber pad should avoid contact with grease and other oil substances and other substances harmful to rubber.

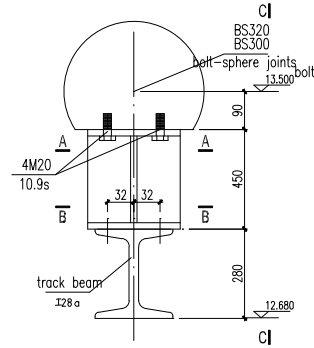

Bolt ball and rail beam hanging node

Hanging nodes for each of the bottom chord node set and track beam and rail beams intersect both joint using friction type high strength bolt connection, and the ball joint with confined type high strength bolt connection nodes track beam joints shall be double nut, spring washer or nut and screw loose prevention measures such as welding die ruling on the atlas 07 sg531 steel grid structure design rail end a gear is 0 7SG359-5

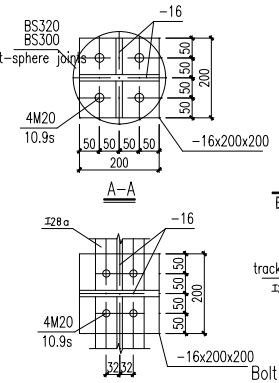

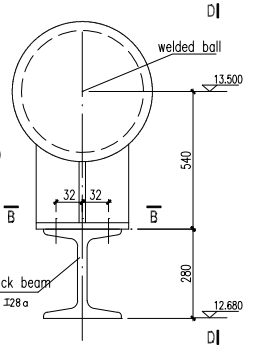

Bolt ball and rail beam hanging node

Hanging nodes for each of the bottom chord node set and track beam and rail beams intersect both joint using friction type high strength bolt connection, and the ball joint with confined type high strength bolt connection nodes track beam joints shall be double nut, spring washer or nut and screw loose prevention measures such as welding die ruling on the atlas 07 sg531 steel grid structure design rail end a gear is 0 7SG359-5

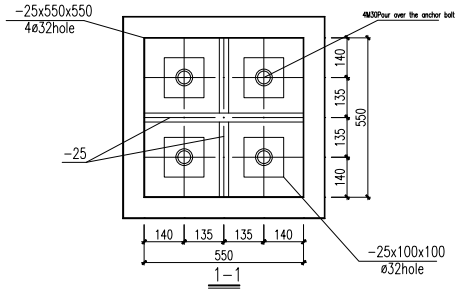

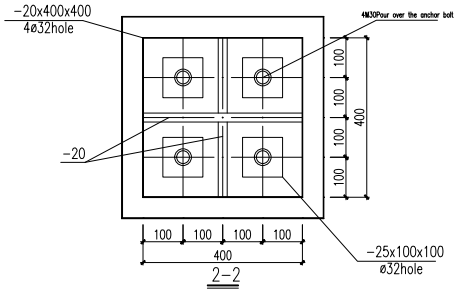

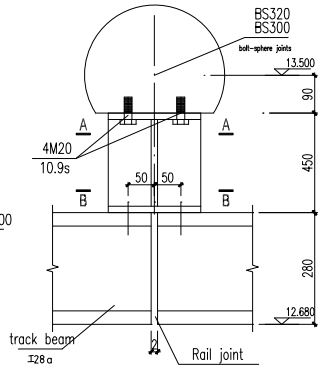

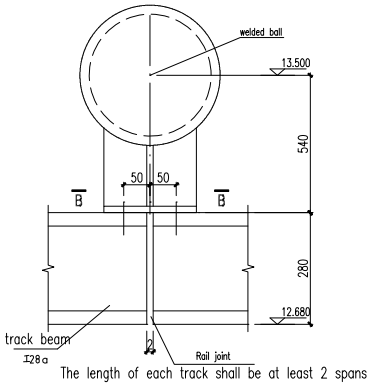

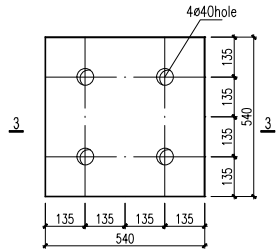

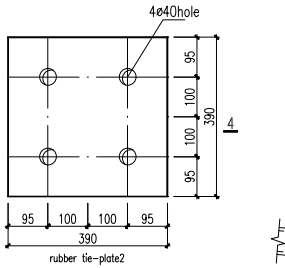

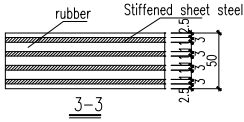

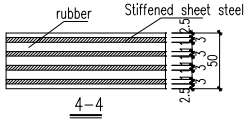

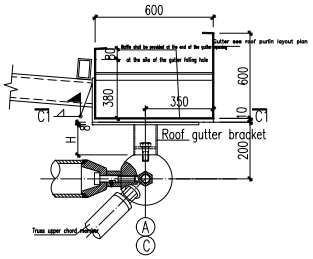

Purlin and gutter joint diagram

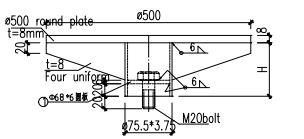

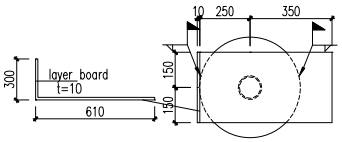

Detail view of network frame node

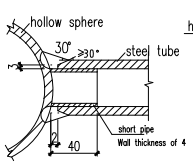

Attached Figure 1: details of connection between steel pipe and welded hollow ball

For steel pipe wall thickness 20mm

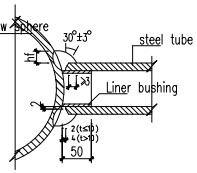

Attached Figure 2: Details of connection between steel pipe and welded hollow ball

For steel pipe wall thickness ≥8mm
t>10mm时,hf=6mm
t<10mm时,hf=4mm
(t is the smaller of the ball or steel tube wall thickness)

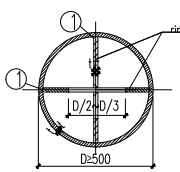

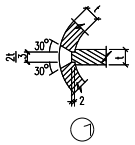

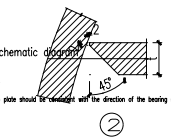

Add double rib hollow ball processing schematic diagram

Note: 1. The direction of ring ribs should be parallel to the horizontal plane

2. When used for bearing the ball, the direction of the annular rib plate should be consistent with the direction of the bearing rib plate

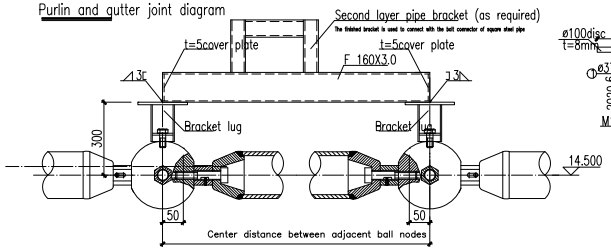

Connecting method of public pipe bracket and lower string bolt ball

Pipe load on bracket is not greater than 8KN

The steel pipe and steel plate are Q235B, and the bolts are GB/ASE C ordinary bolts set according to the position of relevant pipelines in the field of water, heating and electricity

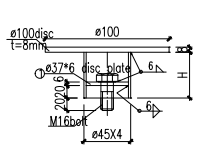

Bracket support detail drawing
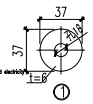
H is determined according to lofting of different ball diameters